Reg. No. | | | | | | | | | | | [17AE45]

FOURTH SEMESTER B.TECH EXAMINATION, JUNE–2019

AEROSPACE STRUCTURES-I

Time:3 Hours **Maximum Marks:70**

Instructions:

1. Answer any **FIVE** full questions choosing at least **TWO** questions from each Part.
2. Any missing data may be suitably assumed.

PART-A

1. a. Define static equilibrium and state equilibrium equations for a rigid body under the following loading conditions: **10** 4

i. General space (non-coplanar) Force system

ii. General coplanar Force system

b. An airplane in static equilibrium is shown in Fig.1. Find the engine Thrust T, Lift L and the Tail load P. **10**

Find the shear force and bending moment across a plane through the CG.

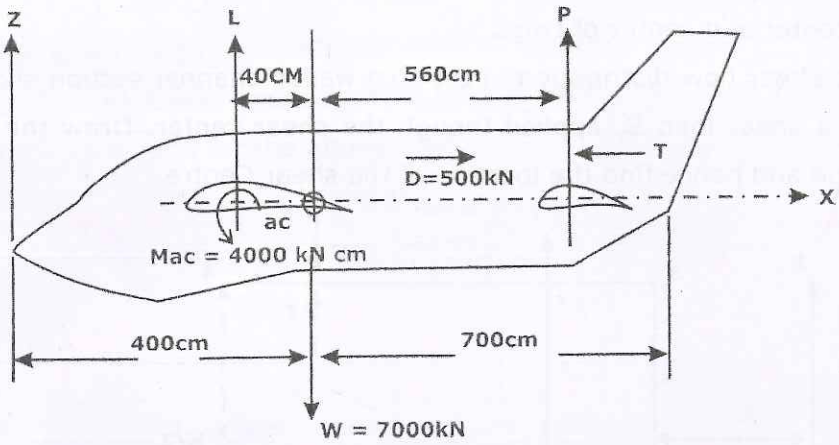

Fig. 1

2. a. State the assumptions and explain how to analyze a simple space truss. **04**

b. For the space truss structure in Fig.2. Find the member forces and characterize the loads. (Tension or Compression) **10**

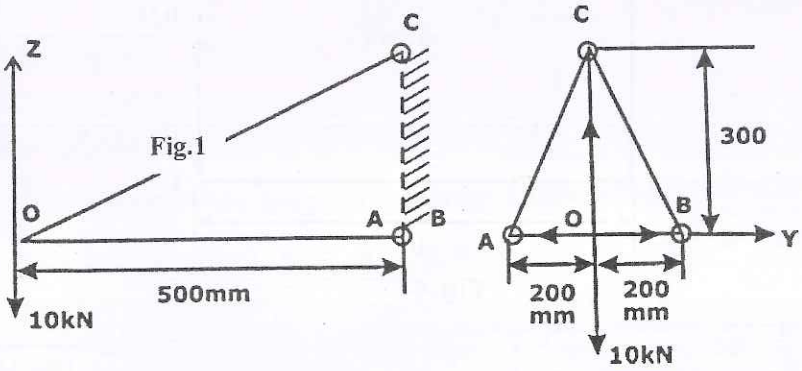

Fig.2

JAIN (Deemed-to-be University) Learning Resource Centre Jain Global Campus Ramanagar-112

3. a. Explain symmetrical and unsymmetrical bending of beams with an example each. What are principal axes? **06**

b. For the cantilever beam shown in Fig.3, supporting 100 kN load at the tip in a plane inclined at 30° to the right of the vertical plane find the value of bending stress at points A, B, C and D, at the root end. **08**

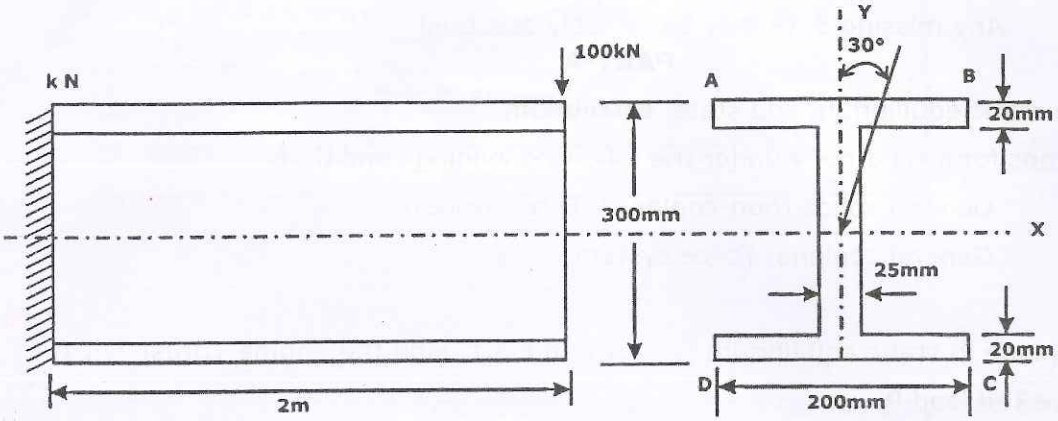

Fig.3

4. a. Define shear center and center of twist. **04**

b. Determine the shear flow distribution in the thin walled channel section shown in Fig.4. Due to a shear load S_y applied though the shear center. Draw the shear flow distribution and hence find the location of the shear Centre. **10**

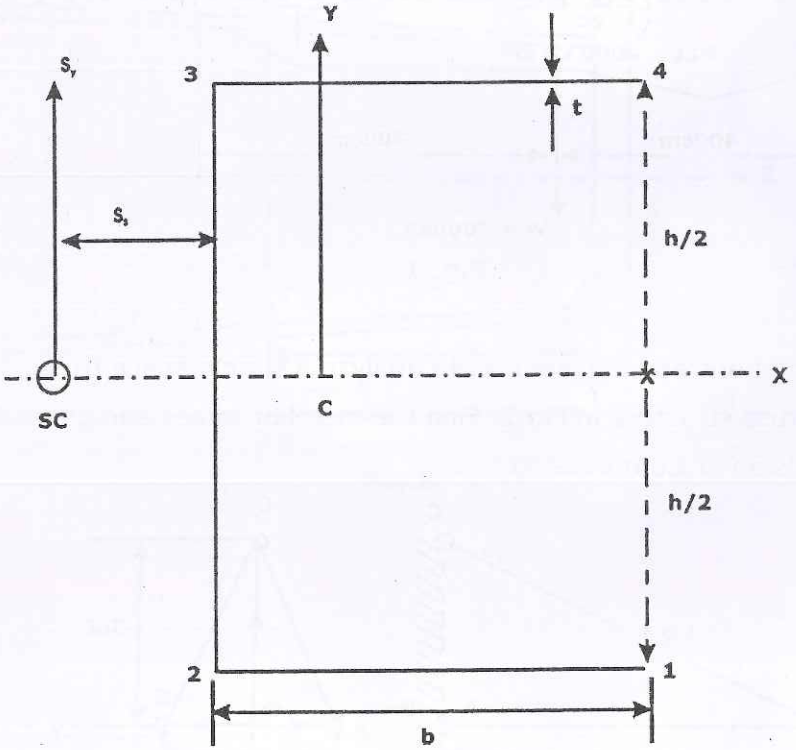

Fig.4

PART – B

5. a. Briefly explain the principle of structural idealization. **04**

b. Part of a wing section is in the form of the two-cell box beam shown in Fig.5, in

which the vertical spars are connected to the wing skin through angle sections having dimension of 50*50*3. Idealize the section into an arrangement of bending stress carrying stringers and shear stress only carrying panels suitable for resisting a bending moment in the vertical plane and hence calculate the bending stress at the idealized stringers due to bending moment, Mx = 400kNm. **10**

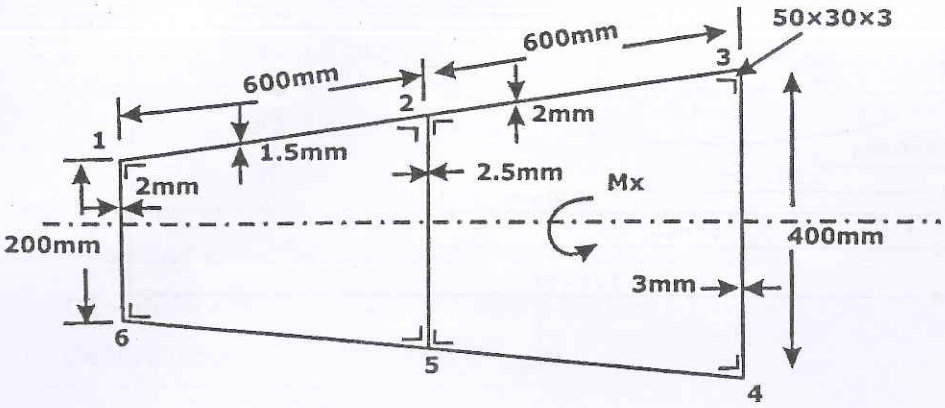

Fig.5

6. **a.** Derive expressions of strain energy for the following loadings:

i. Tensile load acting on a uniform bar. **04**

ii. Flexure of a beam having non-uniform section properties **04**

b. A linearly tapered Al. bar is under an axial load of 2000N as shown in Fig.6. Find strain energy expression for the above case. **06**

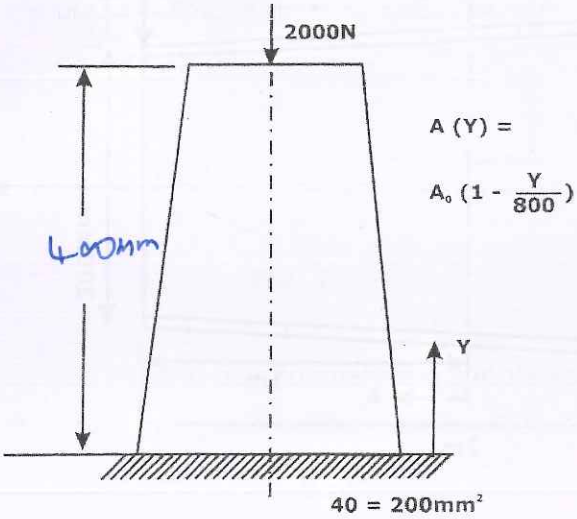

Fig.6

7. **a.** State and prove Betti -*Maxwell's* reciprocal theorem. **06**

b. A cantilever beam 1000 mm long with a prop 650mm from the wall deflects in accordance with the following observations when a point load of 50 N is applied to its end. (Fig.7)

Distance (mm)	0	250	500	650	750	1000
Deflection (mm)	0	-1.6	-2.0	0	2.5	12

08

What is the deflection of the beam at the end due to an100N load applied 250mm from the wall, together with a 40N load applied 500 mm from the wall?

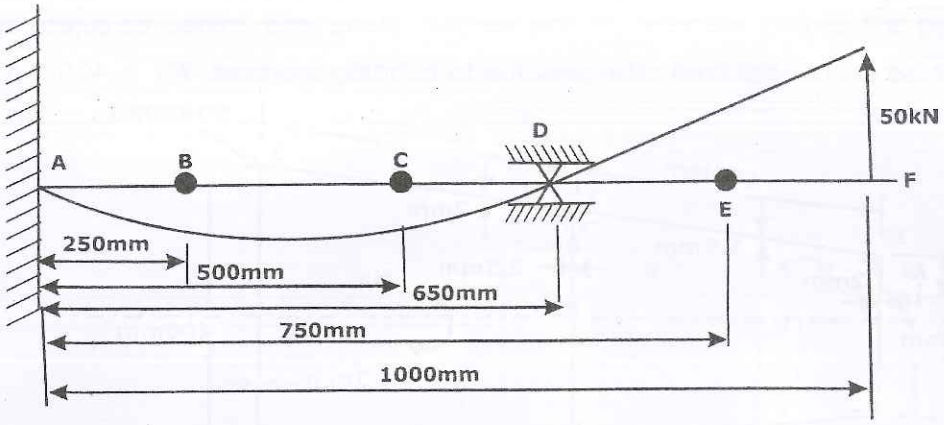

Fig.7

8 An idealized wing spar has the dimensions shown in Fig.8 carries a tip load of 20 kN. The web of the beam has a thickness of 2mm and is effective in carrying only shear stress. The beam tapers symmetrically about its horizontal centroidal axis and the cross sectional area of each flange is 400mm^2. **14**

Do a case study to identify the failure load in the stringers and the shear panel.

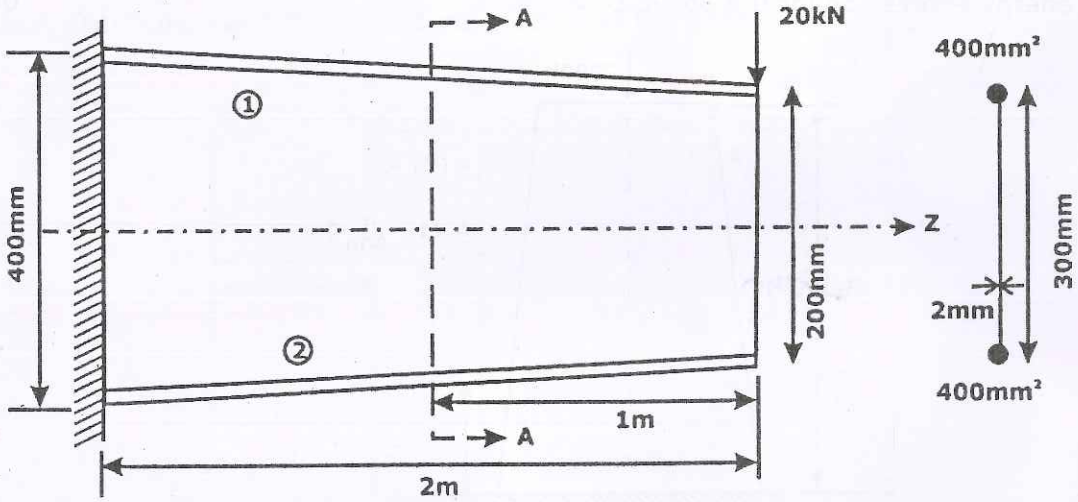

Fig.8